Aircraft Controls

CEC 300: Computing in Aviation and Aerospace

Authors: Richard S. Stansbury

EMBRY-RIDDLE
Aeronautical University

Outline

- Introduction to Control Systems
- Flight Control Systems
  - PID Controller
  - Class Activity – observing PID controller performance.
  - Lateral control
  - Longitudinal control

Introduction of Control System

- Consider: How do pilots control their aircraft? How does it move from point A-to-B or a long a waypoint path?
  - Inputs?
  - Outputs?

- Uncrewed Aircraft Systems and Advanced Air Mobility aircraft reallocates many functions previously performed by the pilot into an overall control architecture.

- This unit focuses on flight control with a review of PID controllers.

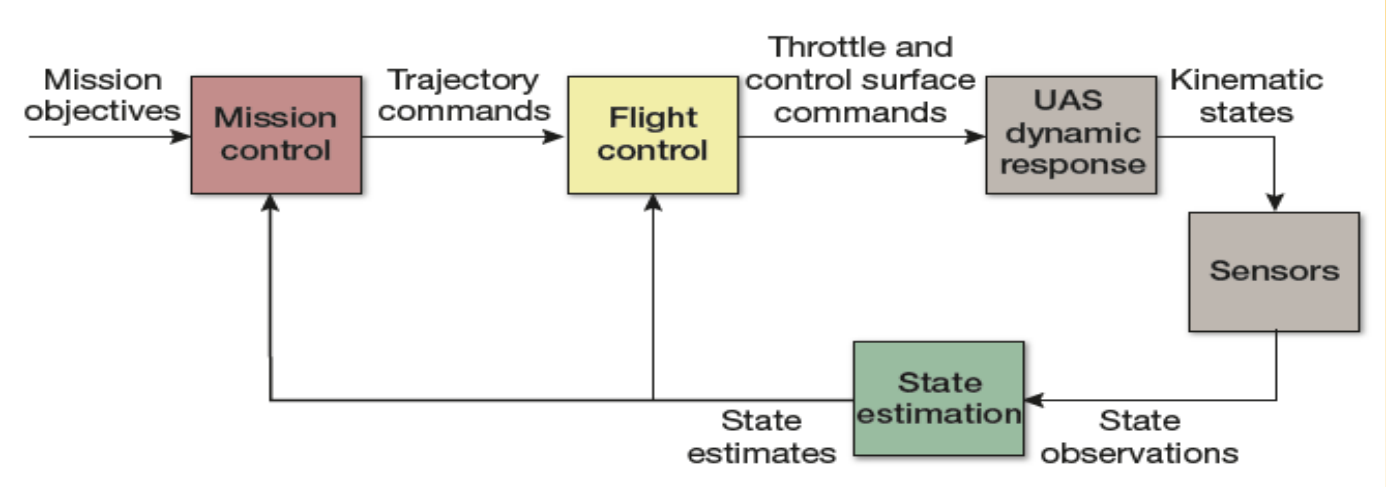

Recap: UAS States Parameters and Control Channels

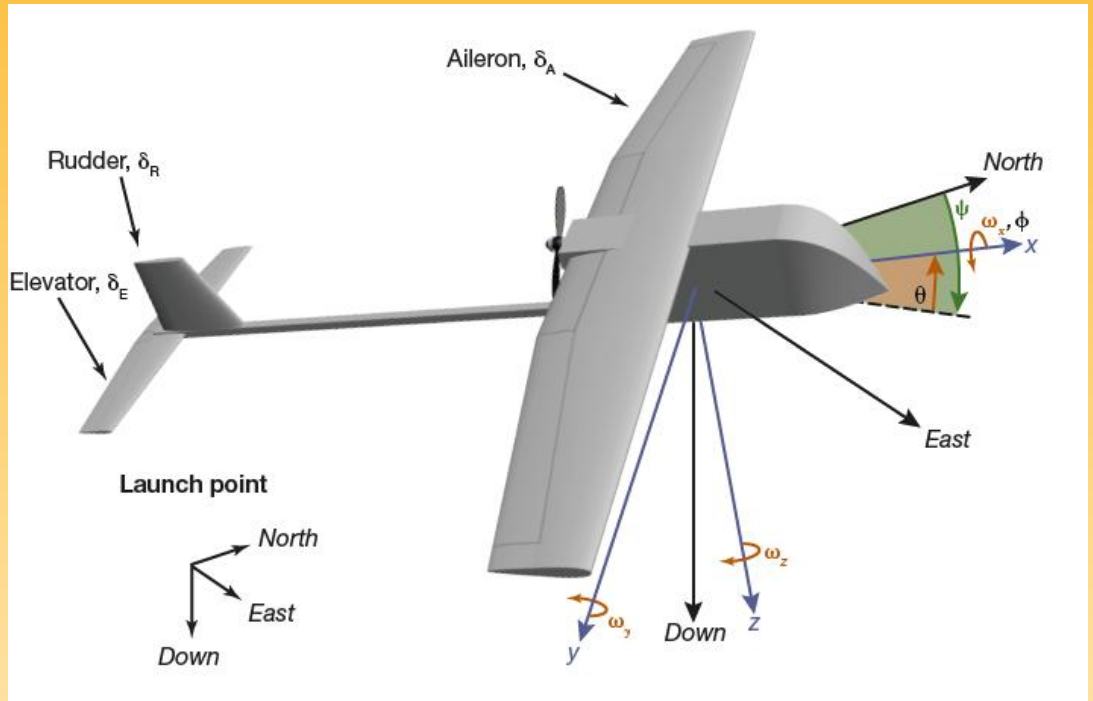

Four common control channels:

- throttle (T channel),
- elevator (δ_E channel),
- aileron (δ_A channel), and
- rudder (δ_E channel)

Table 10.1 UA State Parameters

	State variable	Notes
Position in Earth coordinates	x_E	Relative to a fixed longitude, μ
	y_E	Relative to a fixed latitude, λ
	z_E	Relative to the Earth's surface
Airspeed	V	Total airspeed
	u	Airspeed along x axis (body)
	v	Airspeed along y axis (body)
	w	Airspeed along z axis (body)
Aerodynamic angles	α, Angle of attack	
	β, Angle of sideslip	
Euler angles	Ψ, Heading angle	Relative to North, positive in West direction (counterclockwise)
	θ, Pitch angle	Relative to horizontal, positive up
	φ, Roll angle	
Accelerations in body axes	a_x	
	a_y	
	a_z	
Angular rates in body axes	p	Roll rate
	q	Pitch rate
	r	Yaw rate
Geographic position	λ, Latitude	Can be related to y_E
	μ, Longitude	Can be related to x_E

Examples of mission / class requirements:

- **Intelligence, Surveillance, and Reconnaissance (ISR) Applications:**
  - Special care required to ensure stability of the camera to reduce demand for a high-bandwidth turret / gimbal
- **MicroUAS**
  - Robust controls to handle wind gusts and navigate wind fields.
  - Camera stability is also desired (typically no gimbal)
  - Low cost
- **UAS Flying into Targets (e.g. arresting cable or net recovery)**
  - Precision 3D positioning along flight path
- **UCAV**
  - Typically built with less stable or unstable design (flying wing) putting higher demand on control system
    - Faster update rates
    - High reliability - failure (even temporary) could have more drastic impact on flight safety.

Control system design considerations

- Control system design depends upon:
  - Characteristics of the aircraft
    - Type (fixed-wing, rotorcraft, multirotor, etc.)
    - Class (Group 1, Group 2, …)
    - Sensors
    - Control surfaces / channels available
  - Desired level of autonomy (more on this later)
  - Mission specific requirements or target mission sets

FLIGHT CONTROL SYSTEM

Flight Control Algorithms Overview

- Flight control algorithms typically **decouple lateral control from longitudinal control.**
  - Lateral control - route or steering
  - Longitudinal control – altitude and speed

- **Classic control theory** achieved by the automatic adjustment of control signal(s) to minimize the feedback error.
  - Common method is a proportional-integral-derivative (PID) control algorithm.
    - A feedforward or trim value can also be used.

- Modern control theory
  - e.g. AE 527
  - State-based Controls
  - Utilizes a variety of airframe / aerodynamic parameters to develop model of state changes given control inputs and such
  - Book tries to discuss this method, but poorly

- We will first go over the PID at a high-level and cover specific examples of control system configurations utilizing block diagrams.
  - See Barton for full details.

EMBRY-RIDDLE Aeronautical University

Flight Control Software – Block Diagram

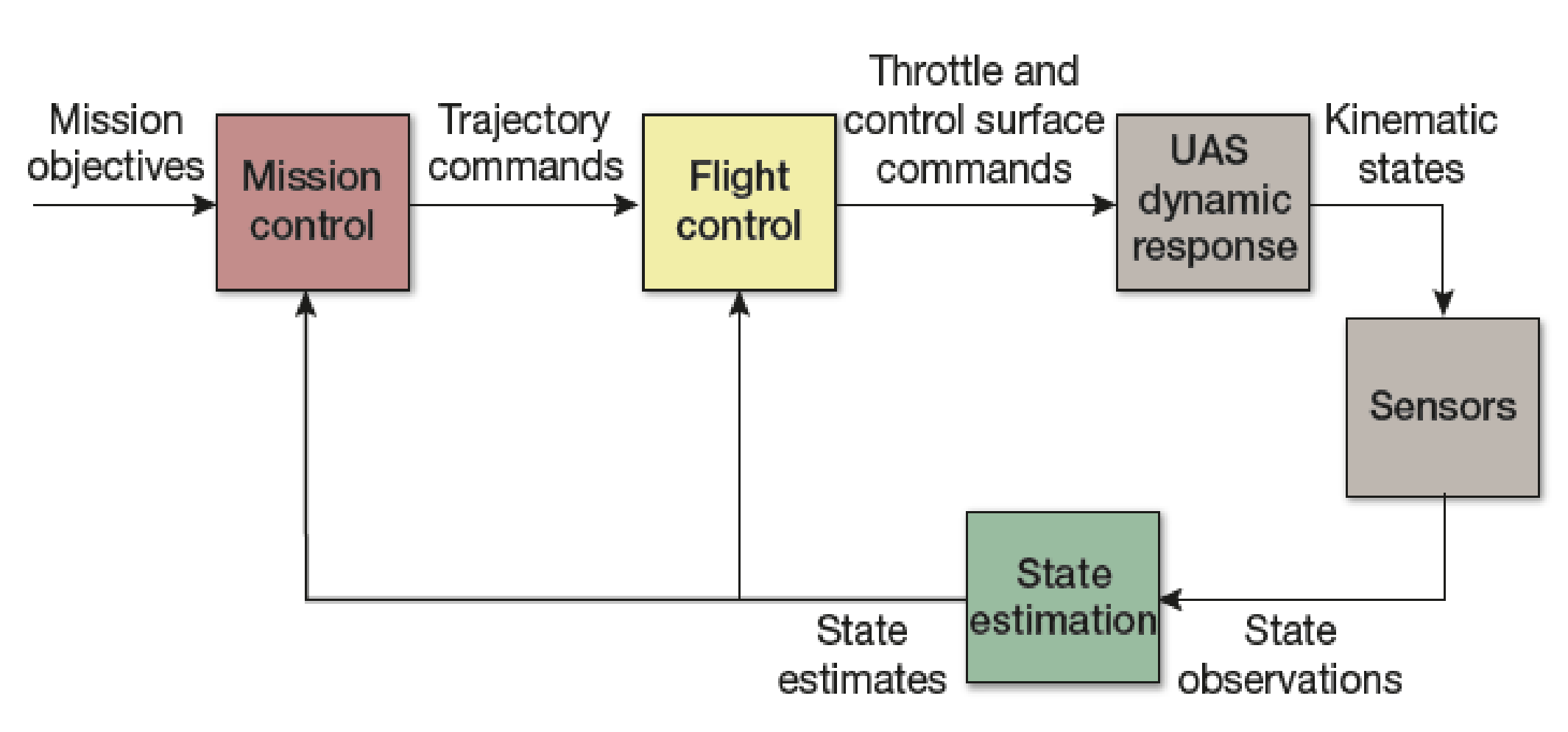

PID Controller Overview Video

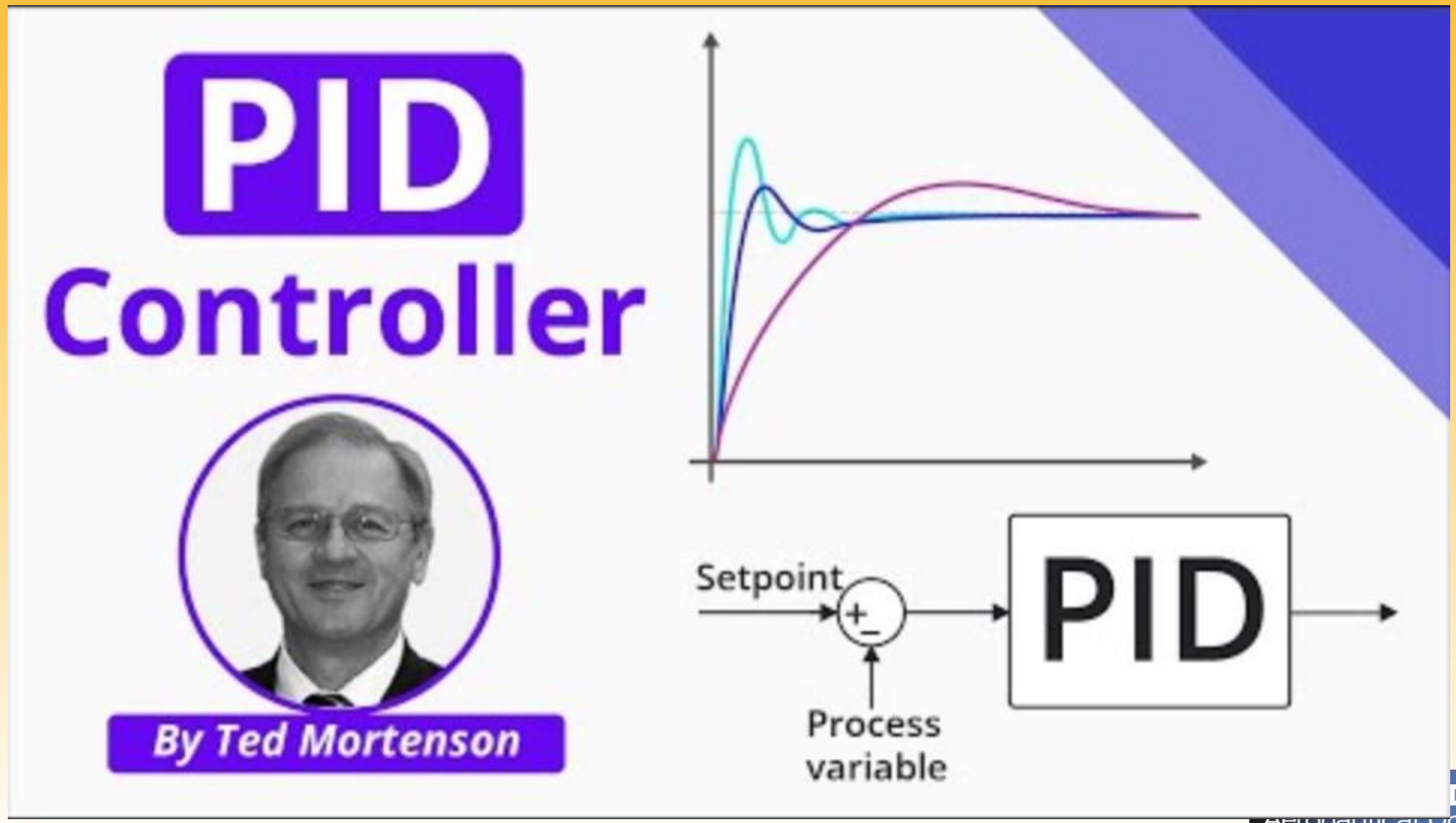

PID Controller

- **Core Components**
  - **Proportional (P) (K_p)**: Reacts to the current error. If the error is large, the control action is large.
    - It provides immediate reaction but cannot eliminate the error on its own.
  - **Integral (I) (K_i):** Accounts for past errors.
    - It accumulates the error over time, forcing the system to eliminate the residual steady-state error that a P-controller cannot.
  - **Derivative (D) (K_d):** Predicts future errors based on the rate of change.
    - It acts as a damper, reducing overshoot and improving stability

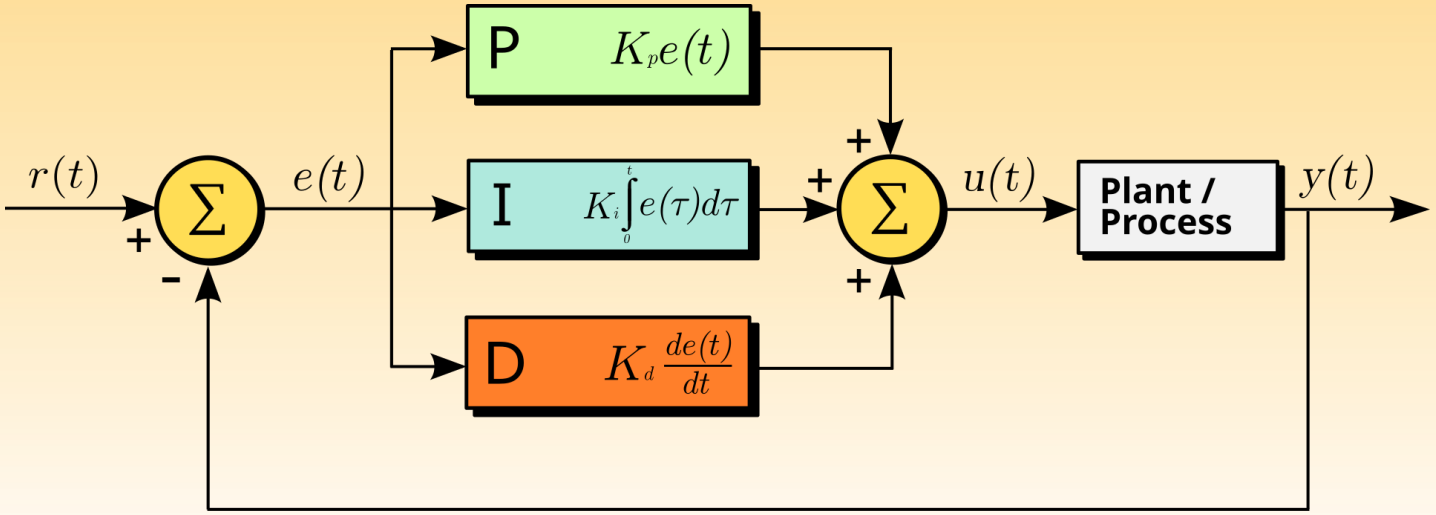

$$e(t) = r(t) - y(t)$$

$$u(t) = K_p \left(e(t) + \frac{1}{T_i} \int_0^t e(\tau)\, d\tau + T_d \frac{de(t)}{dt} \right)$$

where

$T_i = \frac{K_p}{K_i}$ is the integration time constant, and

$T_d = \frac{K_d}{K_p}$ is the derivative time constant.

EMBRY-RIDDLE Aeronautical University

Demo of a PID Controller – Click for Demo

Activity: Open the demo page:
https://lukescholler.com/codes/pidemo

Partner up with someone that has brought their computer or join Dr. Stansbury at the podium.

1. Observe the relationship between your mouse movement vs. the change.
    - Vary the distance
    - Vary the speed of your movement.

2. It is time to begin varying the controller's gains.
- Observe what happens when you vary each of the gains one at a time.
    - Set: Kd=1.5
      Ki=0.000004
    - Write down your observations.

3. Continue to tune your controller. Try to find a set of gains that results in a fast response, with little to zero overshoot, and few oscillations.

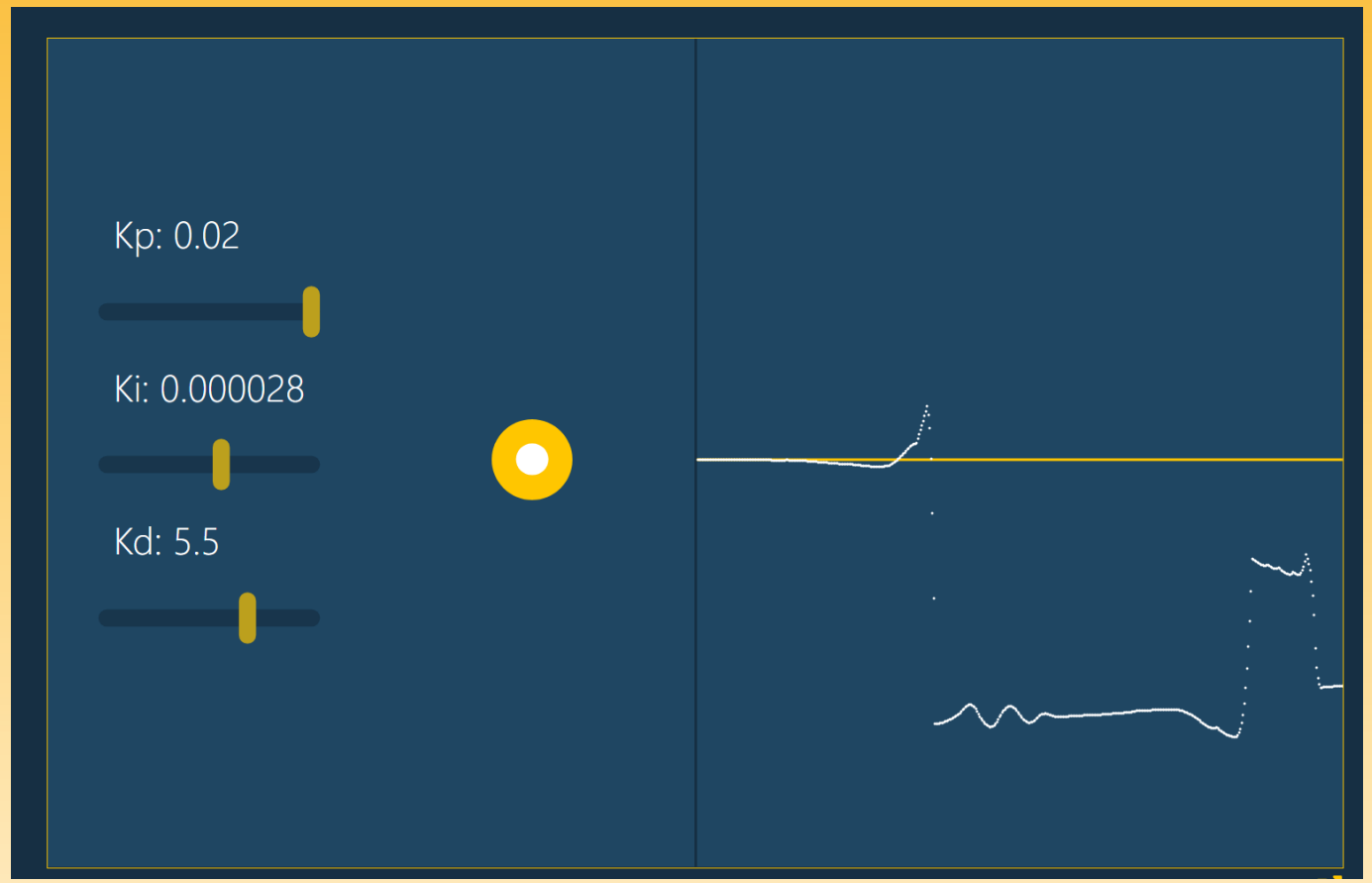

Luke Scholler

EMBRY-RIDDLE Aeronautical University

Throttle Controls: Walk through of a PID controller with Feed Forward and Trim controls

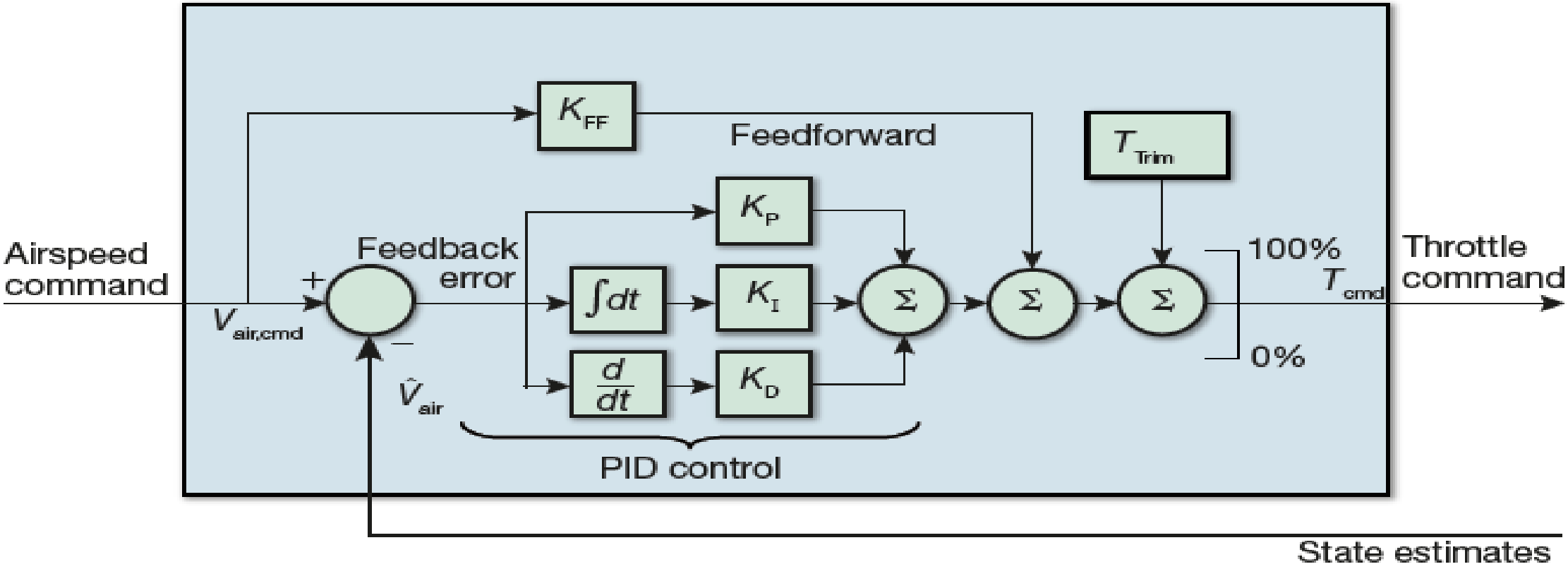

Figure 12. Airspeed to throttle control (example). Classical feedback control methods are often used in small UAS flight control. As an example, this figure shows an augmented PID compensator controlling throttle to achieve a desired airspeed.

Comments on the PID model shown…

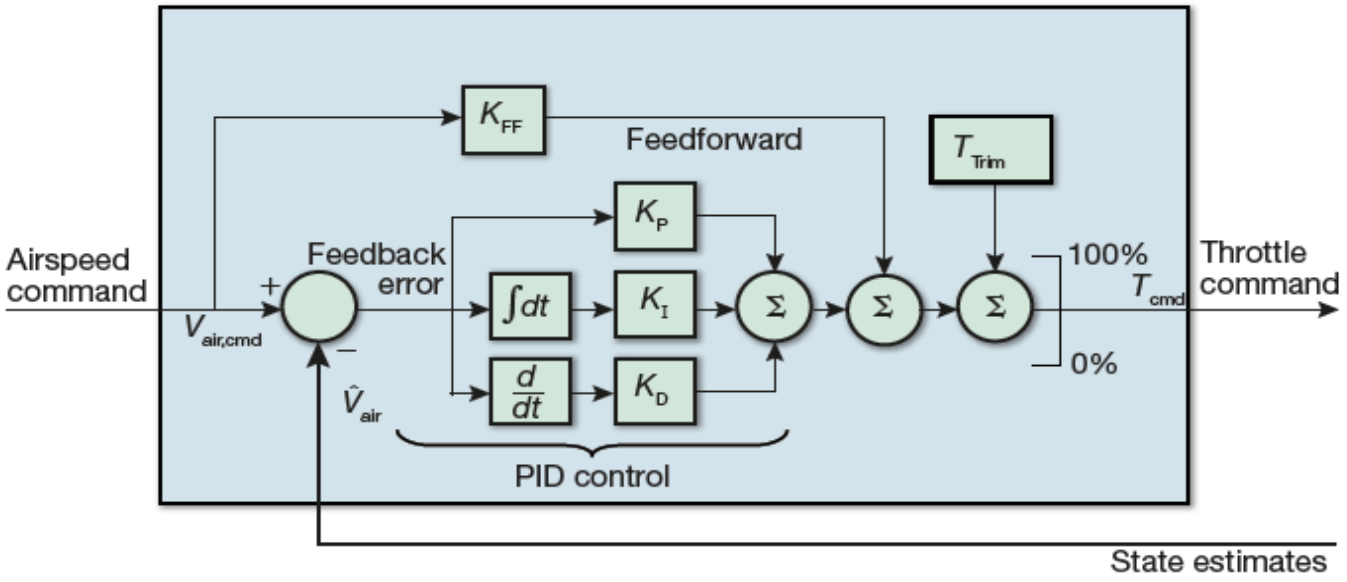

Figure 12. Airspeed to throttle control (example). Classical feedback control methods are often used in small UAS flight control. As an example, this figure shows an augmented PID compensator controlling throttle to achieve a desired airspeed.

What does the proportional element of the controller do?

The proportional unit is the largest driver of change within the control system.

Simply put, its output is the error multiplied by the proportional coefficient.

Limitation: Steady-state error.

As the error shrinks, the amount of power to deliver the change persists resulting in a solution that is near, but not quite at the commanded state.

Comments on the PID model shown…

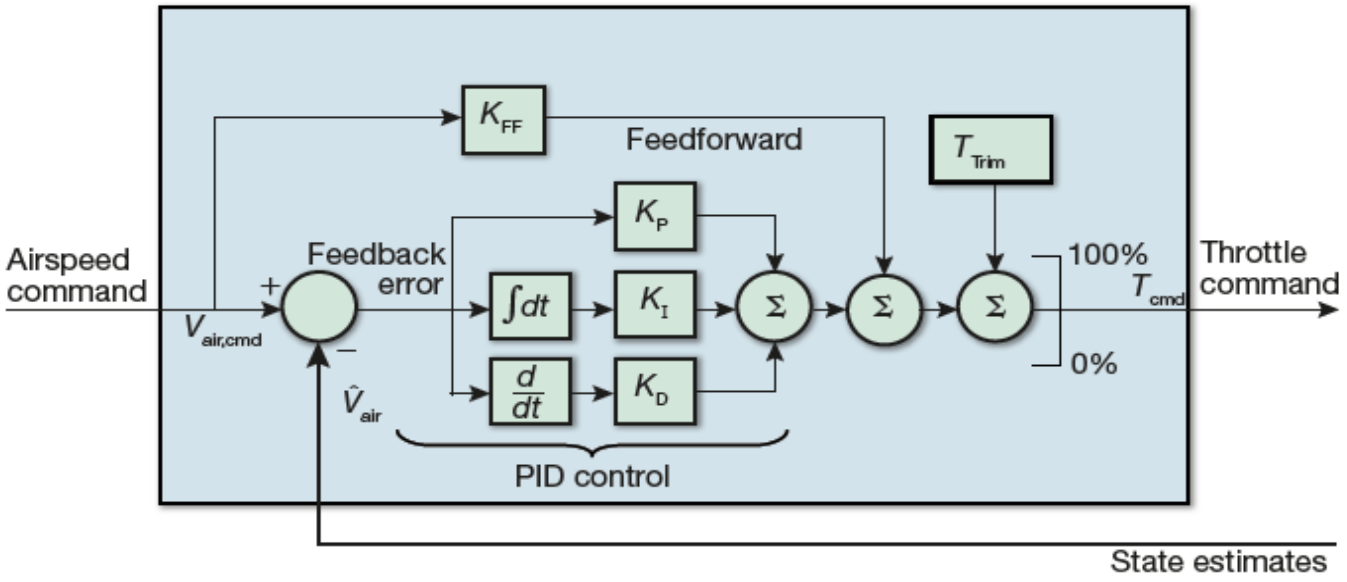

Figure 12. Airspeed to throttle control (example). Classical feedback control methods are often used in small UAS flight control. As an example, this figure shows an augmented PID compensator controlling throttle to achieve a desired airspeed.

What does the integral do?

The integral is the accumulated error at the current time step. i.e., it sums the error over time.

If error persists (even small error) from the proportional controller, the integral becomes larger meaning there is a greater "push" driving the error toward zero.

However, if the value of K_i is too high, either the system becomes sluggish or it begins to overshoot.

Comments on the PID model shown…

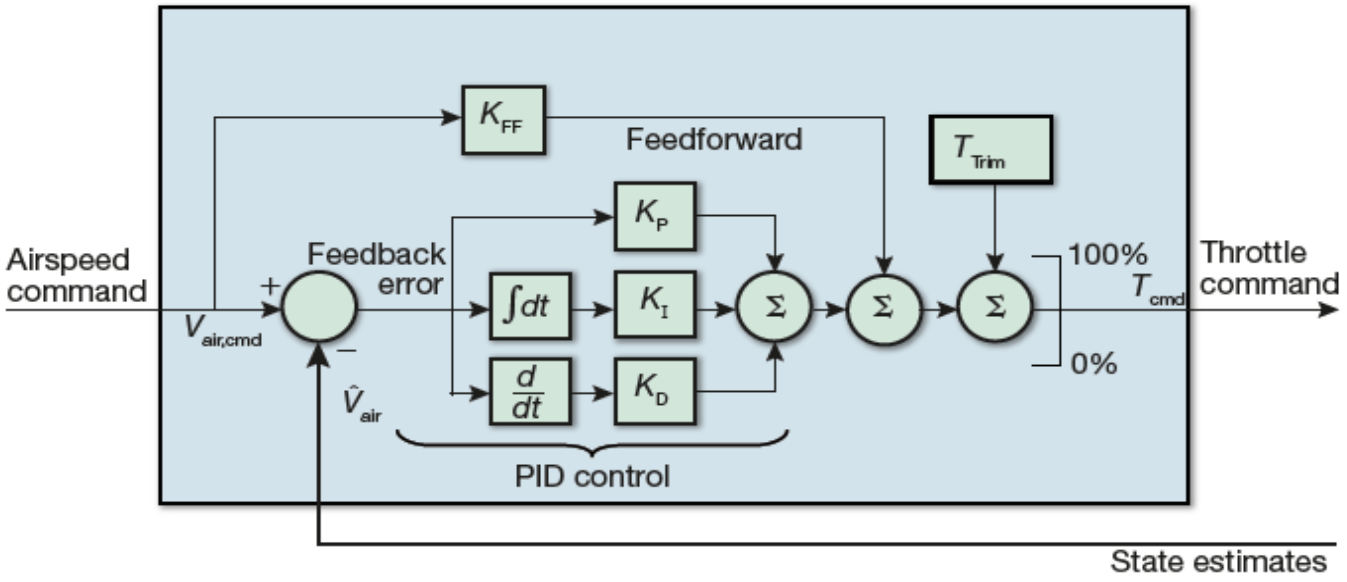

Figure 12. Airspeed to throttle control (example). Classical feedback control methods are often used in small UAS flight control. As an example, this figure shows an augmented PID compensator controlling throttle to achieve a desired airspeed.

What does the derivative do?

The derivative acts like a dampener or limiter, which limits the rate of change more as the output reaches the set point, i.e. as error approaches zero.

This mitigates cases where the controller's response overshoots the set point.

However, if the measurements/state estimates are noisy, which appear as small but significant change in error, which can cause the control system to likewise twitch/jitter.

Comments on the PID model shown…

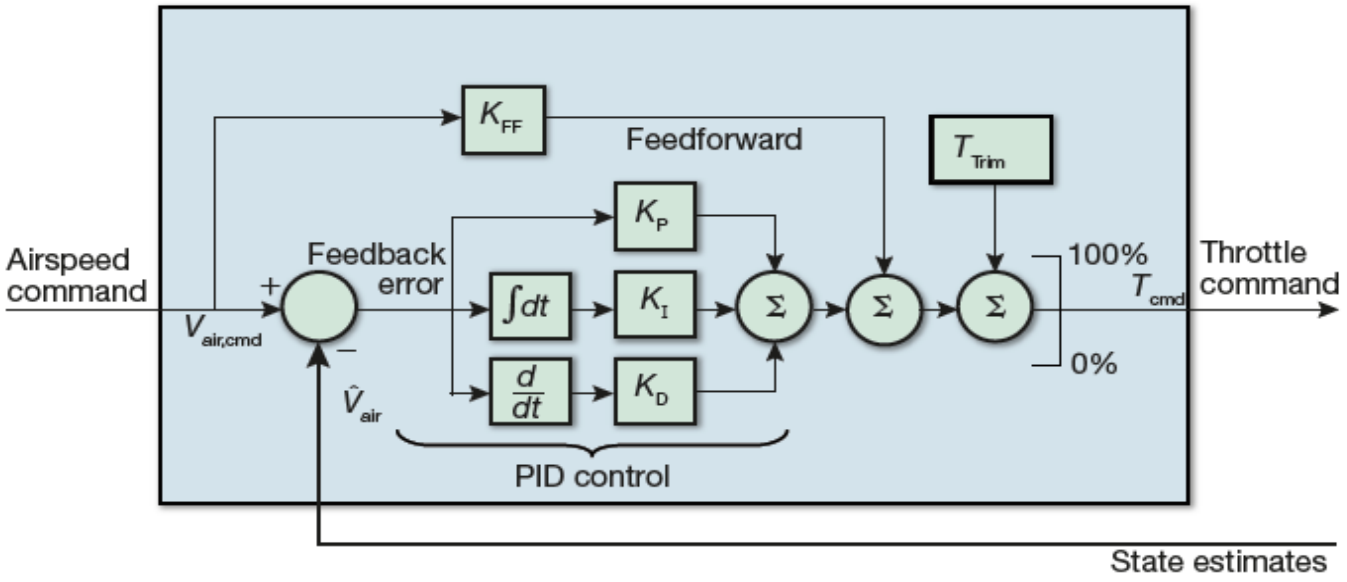

Figure 12. Airspeed to throttle control (example). Classical feedback control methods are often used in small UAS flight control. As an example, this figure shows an augmented PID compensator controlling throttle to achieve a desired airspeed.

What does Feed Forward do?

It serves several purposes:

- **Reduces lag in response because the control's output will be tuned around the commanded state.**

  e.g. If the vehicle needs to slow by 0.5 of throttle's airspeed command, then the feed forward path will add the target, 0.5 as a starting point for the output and the PID will fine tune the system response.

  Note that the feedforward terms are not part of the PID control loop.

Comments on the PID model shown…

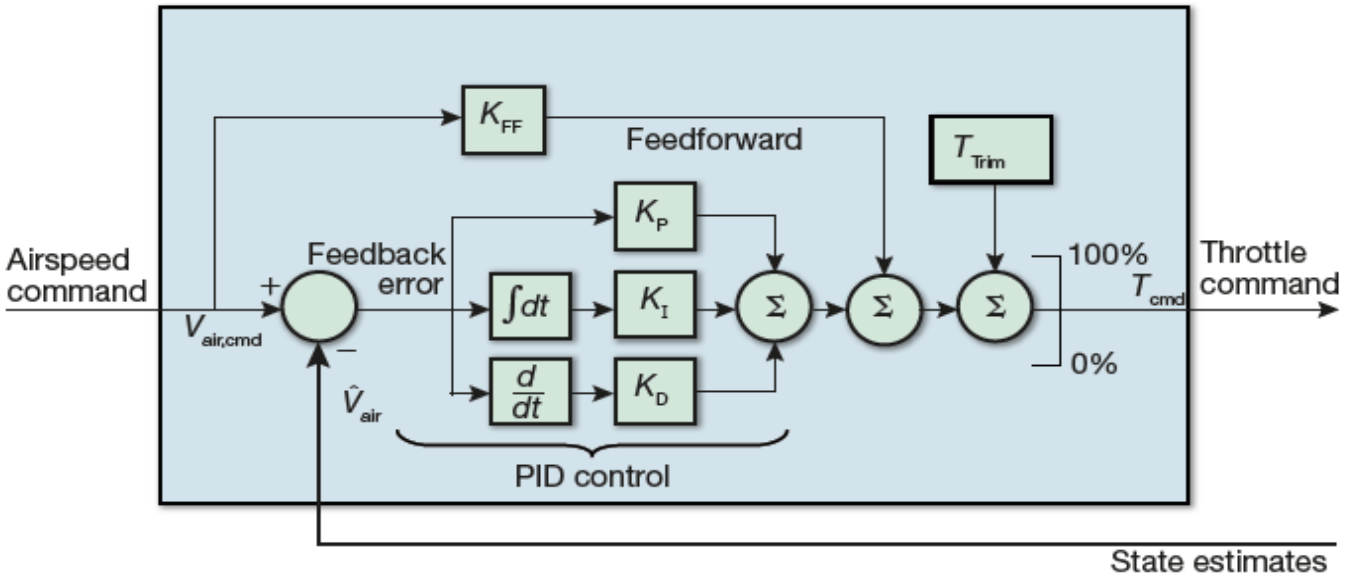

Figure 12. Airspeed to throttle control (example). Classical feedback control methods are often used in small UAS flight control. As an example, this figure shows an augmented PID compensator controlling throttle to achieve a desired airspeed.

A saturated controller is similar to a saturated reaction wheel. It has made enough correction to the maximum or minimum such that it can no longer increase or decrease.

What does T_{trim} do?

It represents the desired steady state for the controller's output.

As startup, with T_{trim} and the K_{FF}, dials in the expected state to achiever the desired set point.

This reduces the efforts of the PID controller to identifying the small corrections that need to be made.

It effectively puts the center of the controller's range at a particular value such that the controller does not become saturated.

Lateral Control

A desired trajectory segment is given to the autopilot (e.g. a waypoint-defined path or loiter circle)

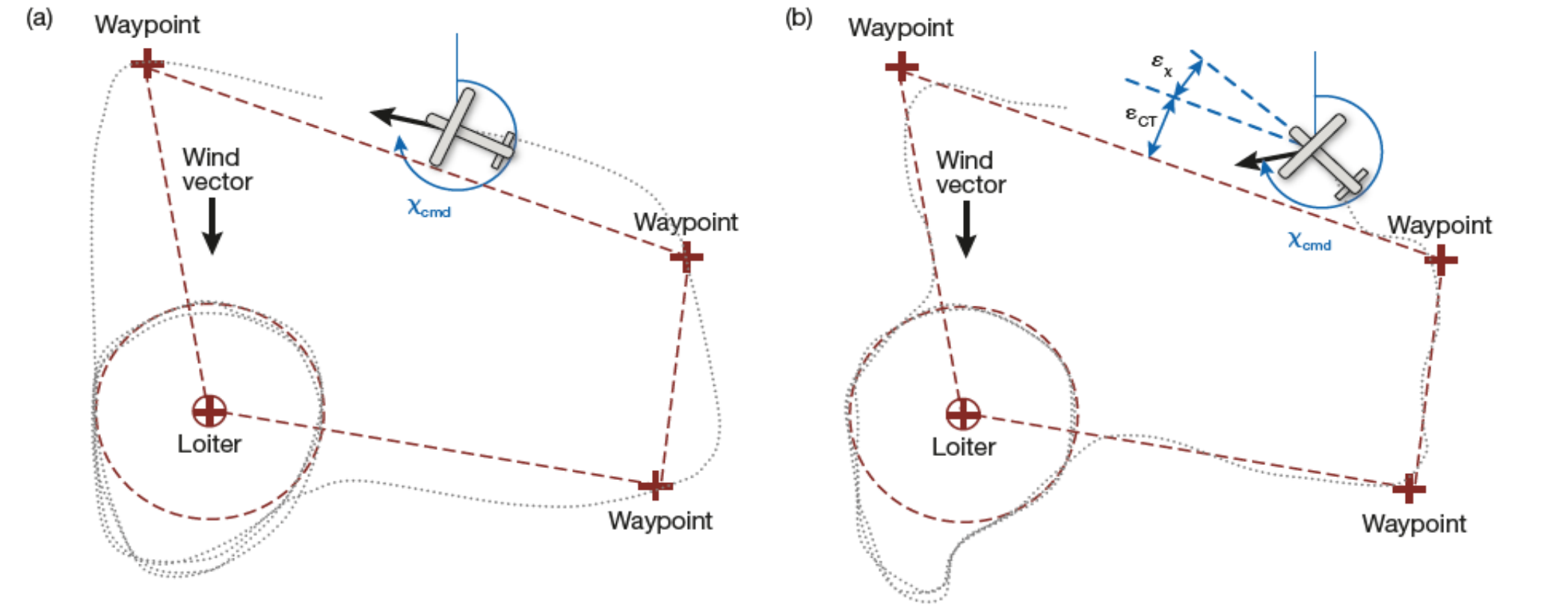

- In the figure, the UAS is commanded to (a) fly toward the next waypoint or (b) fly a path trajectory between waypoints.
- The course command (χ_{cmd}) is given as a function of the heading error (ε_x) and the crosstrack error (ε_{CT})

Lateral Control Block Diagram

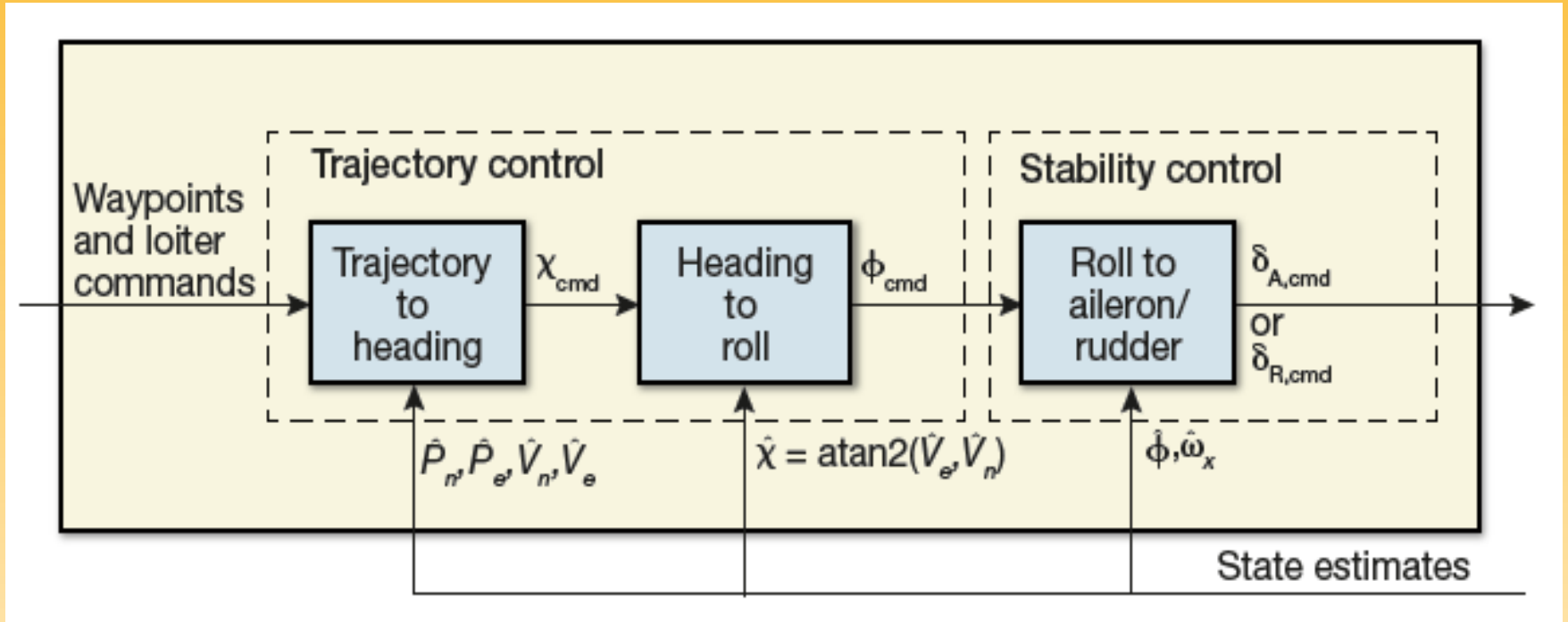

- Trajectory control algorithm converts trajectory errors into heading commands
- Heading command is compared with estimated heading and generates a roll command
- Roll command feeds the horizontal stability control algorithm
  - Using roll and possibly roll rate as feedback, it generates an aileron and/or rudder command.
- Note: If **manual control** (with airspeed and altitude maintained with a closed longitudinal control loop), the outer loop is overridden with the commanded roll or heading commands from the pilot, which is fed to the stability control to be executed.

Longitudinal Control

- Combination of elevator and throttle used to control altitude and airspeed.
  - Algorithms for altitude and airspeed can be decoupled, but airframe response is coupled.
    - Change in altitude through an elevator control will impact airspeed.
    - A reduction in airspeed will result in a loss of altitude given reduction in lift produced by wings resulting from the airspeed change.

- Two control algorithm concepts will be covered.
  - Altitude hold mode (i.e. cruise)
    - Current altitude and roll are used to determine commanded pitch and airspeed is used to adjust throttle.
  - Climb / Descent mode
    - Current airspeed is used to control pitch and altitude is used to control throttle.

- Inner loop for stability control for both is the same
  - Throttle command is passed through
  - Pitch command is translated to elevator setting

Longitudinal – Altitude Hold

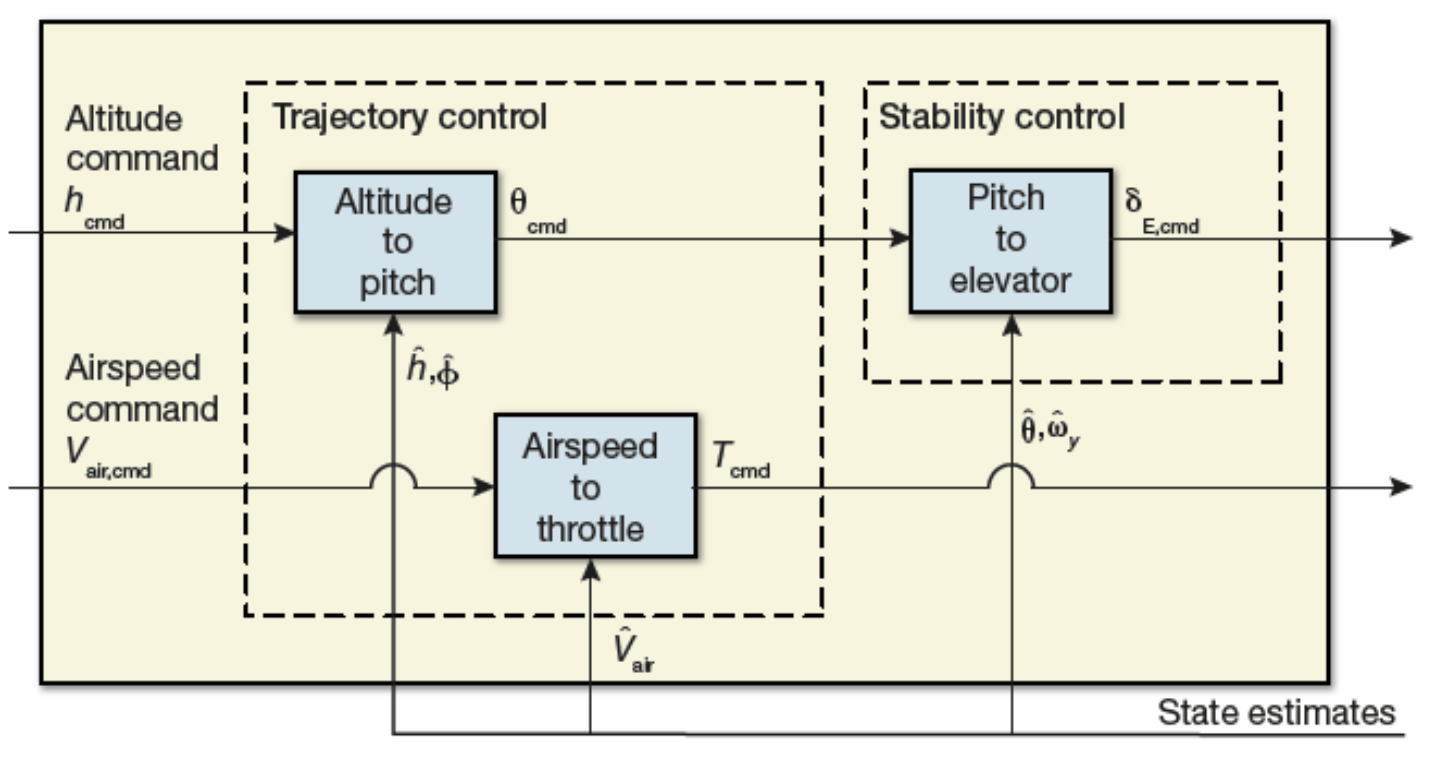

Inner loop (stability control)

- Receives current pitch and state estimates for pitch and angular rate in the y axes (pitch rotational rate)

- Example of Longitudinal flight control using airspeed to determine throttle and a altitude to pitch (used for altitude hold) (figure from Barton).
  - **Altitude to Pitch Control** - determines changes to pitch given altitude and roll versus the commanded altitude.
  - **Airspeed to Throttle Control** – determines the change in throttle given the error between the current and command velocity

Tuning PID-based Control System

- Tuning for a small UAS is typically achieved through an experienced pilot flying the vehicle and making observations.
  - First tune for stable level flight
  - Then tune for lateral and longitudinal flight by adjusting the gains of the PID controller.

- Some level of tuning can be handled through simulation
  - ***Software in the Loop***
    - Simulate environment, aircraft dynamics model, and runs virtual control system
    - Sensor data is simulated based upon simulation state
    - Command influences vehicle in simulation given dynamics model
  - ***Hardware in the loop***
    - Similar to SIL
    - Hardware controller is connected, but utilizing simulation's sensor inputs and commands are handled by simulation and not actual aircraft systems

AUTONOMY

Automation and Autonomy

- FAA avoids use of “autonomy” in preference for “automated” or “automation” in discussing UAS
  - An autonomous system would be capable of operating on its own without human intervention to perform high-level mission objectives.

- What are some automated tasks? Possible automated tasks
  - Flight stability control
  - Waypoint navigation
  - Vehicle health recovery system (adapt control system based upon degradation)
  - Contingency management
  - Detect-and-avoid
  - Auto-takeoff/launch
  - Auto-land/recovery
  - Aerodynamic termination

Autonomy Definitions

- No common definition
- A definition or further guidance is needed to help refine the safety case for a UAS
- Higher levels of automation require higher assurance of safety critical elements of the system that replaces the role of the pilot (perception and control)
- Examples of autonomy / automation definitions given:
  - NIST
  - NATO STANAG 4586
  - JARUS II's Acceptable Means of Compliance for 23.130 (EASA)
  - ICAO Circular 328
  - UAS S&T Roadmap
  - Gundlach

NIST Levels of Autonomy for Unmanned Systems

- ALFUS defined by NIST
  - Autonomy levels determined based upon weighted metrics:
    - Mission Complexity
    - Environment Complexity
    - Human Intervention
  - Method of assessing tasks and conditions of operation to determine level of autonomy needed.

	reference metrics summaries			ALFUS Levels
reference levels:	MC	EC	HI	User-defined levels using metrics summaries to the left
10	highest adaptation, decision space, team of teams collaborative missions; fully real-time planning; omniscient, highest level fidelity SA; human level performance	lowest solution/possibility ratio: lowest margin for error, understandability; highest level of dynamics, variation, risks, uncertainty, mechanical constraints*	performing on its own and approaching zero human interaction, negotiating with appropriate individuals	
9	high adaptation, decision space, team collaborative missions/tasks; high real-time planning; strategic level, high fidelity SA	low solution/possibility ratio, understandability highly dynamic, complex, adversarial high risks, uncertainty, constraints*	UMS informs humans; human provides strategic goals, interacting time between 6 % and 35 %;	
8				
7				
6	limited adaptation, decision space, vehicle tasking; limited real-time planning; tactical level, mid fidelity SA	mid solution/possibility ratio, understandability dynamic, simple mid risks, uncertainty, constraints*	human approves decisions, provides tactical goals, interacting time between 36 % and 65 %	
5				
4				
3	subsystem tasks/skills; internal, low fidelity SA	high solution/possibility ratio, understandability static, simple low risks, uncertainty, constraints*	human decides, provides waypoints, interacting time between 66 % & 95 %	
2				
1				
0	simplest, binary tasks	static, simple	remote control	

NATO STANAG 4586

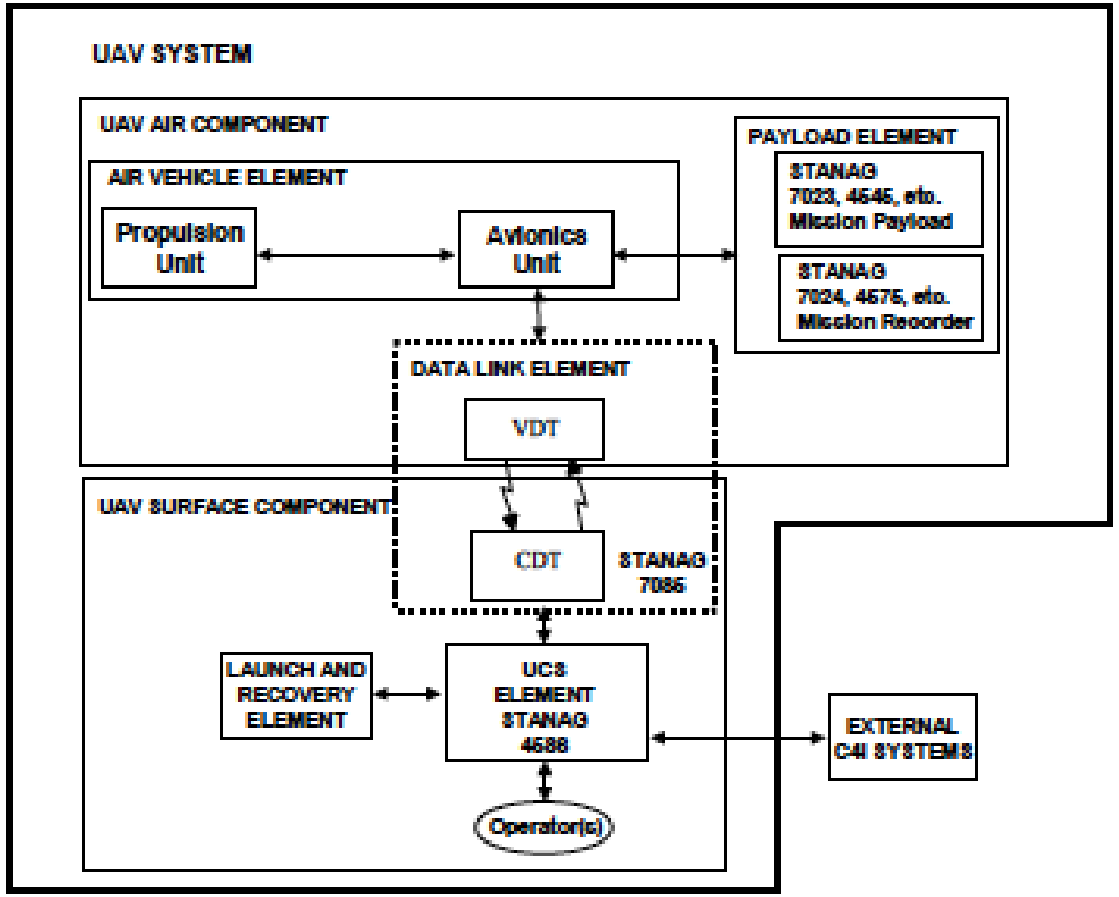

Figure B - 3. UAS Interoperability Architecture

Level 1:	Indirect receipt and/or transmission of sensor product and associated metadata, for example KLV Metadata Elements from the UAV.
Level 2:	Direct receipt of sensor product data and associated metadata from the UAV.
Level 3:	Control and monitoring of the UAV payload unless specified as monitor only.
Level 4:	Control and monitoring of the UAV, unless specified as monitor only, less launch and recovery.
Level 5:	Control and monitoring of UAV launch and recovery unless specified as monitor only.

NATO STANAG 4586 defines interoperability between the unmanned aircraft and the surface component (ground control station and other command, control, communication and intelligence (C4I) systems.

Defines levels of interoperability based upon the distribution of tasks between unmanned aircraft and flight crew.

Not autonomy per se, but defines some granularity

ICAO Circular 328 Definitions

Autonomous aircraft. An unmanned aircraft that does not allow pilot intervention in the management of the flight.

Autonomous operation. An operation during which a remotely-piloted aircraft is operating without pilot intervention in the management of the flight.

US Army S&T Roadmap

	Barriers to Achieving our Vision —>	Simplistic and Shallow World Model	Mobility-Focused Perception	Tele-operated or (at best) Scripted Planning	No Shared Understanding of Missions and Roles	Missing or Shallow Learning Capabilities
		World Model is either at only a metric level precluding reasoning, or at only a cognitive level without physical grounding	Objects in the world are perceived primarily only as mobility regions not as discrete objects of semantic and cognitive importance	Bots are almost always tele-operated or at best only perform sample scripted behaviors - and scripting all needed behaviors is not tractable	Bots are opaque and distributed, and cannot explain what they are doing - primarily because they don't know	Bots must be explicitly programmed to do tasks, so it is intractable to product the needed scope of behavior. Any learning capability is shallow and lacks generalization
"Think"	**Adaptive Tactical Reasoning**					
	Understand tasks, missions (METT-TC)	World model needs to represent concepts such as missions, tasks, and generally METT-TC.		Robots need to generate behaviors pertinent to achieving the mission, adapt to changing situation.	Robots need to be able to follow instructions given at a semantic or cognitive level, not just "goto (x,y)."	
	Follow semantic instructions					
	Generate behaviors to achieve mission, adapting to changing situation					
	Understand teammates and what they need to know					
"Look"	**Focused Situational Awareness**					
	Maintain SA relevant to current task/mission	World model needs to represent, maintain, monitor, and correct all info needed for SA.	Robot needs to contribute to the general SA of the unit, noting salient observations.		Robot needs to report on salient observations as needed to other elements of its unit.	Robot should learn by comparing its observations and actions to those of ts human counterparts.
	Contribute to general SA of unit					
	Look for salient unforeseen events					
	Observe and report on salient activity					
"Move"	**Safe, Secure and Adaptive Movement**					
	Move cognitively in reaction to safest route in the world (as people do) with GPS or other metric crutches	World model needs to store and operate upon all entities needed to relate movement to tactical constraints.	Robot must perceive all entities in its environment relevant to safe, secure, and adaptive movement.	Robots must move in a tactically correct manner and react to changes in mission or circumstances.		Robot needs to learn from its movement experience whether from mobility challenges or tactical behavior.
	Move in tactically and continually relevant manner					
	Adjust to mobility challenges such as terrain, weather, barriers					
"Talk"	**Efficient Interactive Communication**					
	Receive and acknowledge semantics instructions	World model needs to have shared mental models as a basis for human-robot interaction.	Robot needs to send and information relevant based on a shared perception (common ground).		Robot needs to receive and acknowledge4 cognitive-level instructions and similarly explain its own behavior.	Robot needs to be able to learn through cognitive-level interaction with human teammates.
	Explain own behavior					
	Report information relevant to mission					
	Seek guidance as needed					
"Work"	**Interaction With Physical Wold**					
	Inspect and manipulate objects	World model needs to represent wide variety of objects to be manipulated.	Robot needs to perceive well enough to interact effectively with objects in a 3D world.	Robot needs to figure out how and when to manipulate or transport objects as needed.		Robot needs to learn from interaction with the physical world, e.g. when door is locked.
	Transport objects as needed					
	Open doors, windows, hoods, trunks, etc.					
	Use tools as needed					

US Army S&T

Five domains:

- **Think** – Advanced Tactical Reasoning
- **Look** – Focused Situational Awareness
- **Move** – safe, secure, and adaptive movement
- **Talk** – efficient proactive interaction with humans
- **Work** - Interaction with the physical world

Figure shows Army's vision for each of these areas.

Source: DOD Unmanned Systems Integrated Roadmap (2013-2015)

EMBRY-RIDDLE Aeronautical University

Contingency Management

- Autonomous operations to support the resolution of a safety critical failure
  - Attempts to mitigate risk, and
  - Allow time for recovery
- Examples:
  - Lost communications
    - Fly to rally point and loiter
    - Fly home and land
  - Onboard fire
    - Fly to suitable landing site and land
  - Lost GPS
    - Loiter until manual control
- Capabilities can be built in
  - Some systems have simple automated routines
  - Others have complex "trees" of actions based upon mission and pre-planned contingency actions
    - E.g. Global Hawk contingency management (see figure to right)

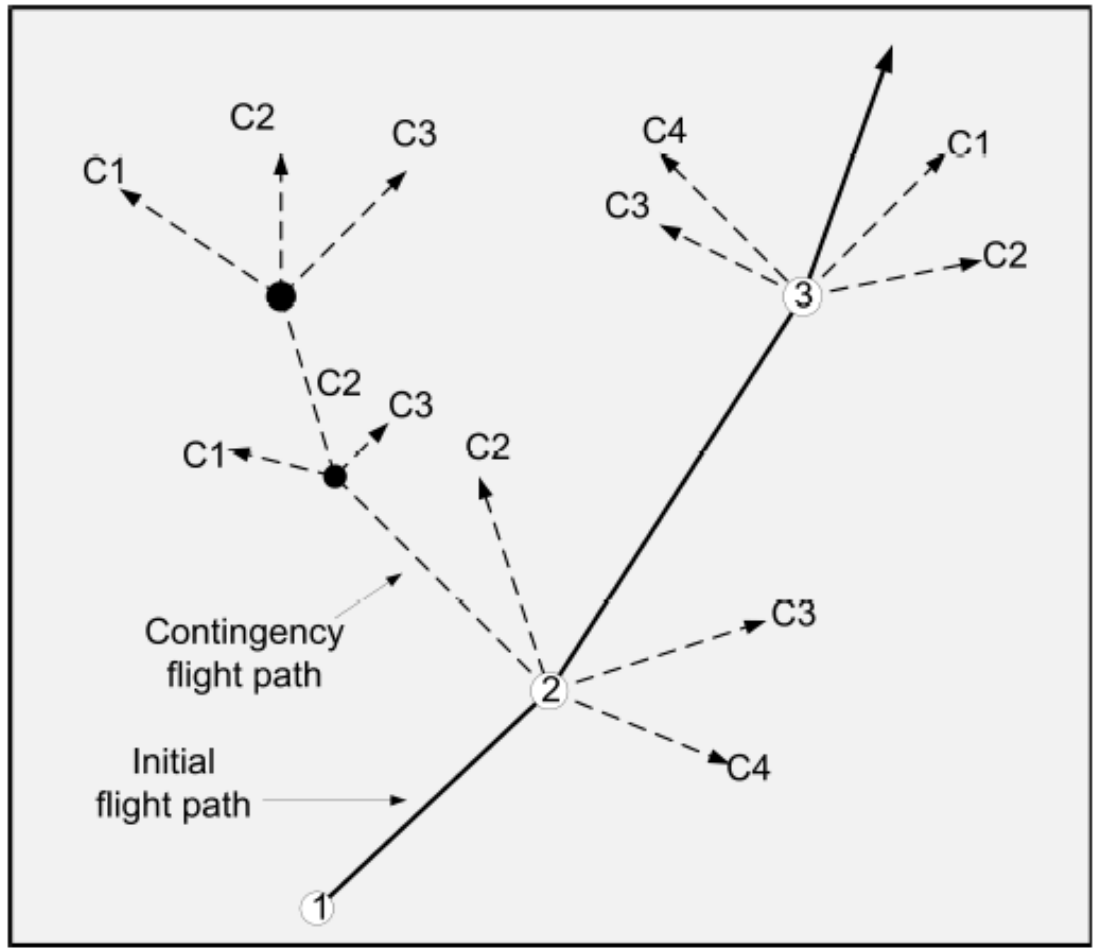

Fig. 5 Contingency routes for Global Hawk. (Winstead, 2008)

Contingency Management (2)

Table 19 Autopilot ERFT capabilities.

Autopilot	Contingency-based Recovery	Flight Termination
Cloudcap Piccolo	Return to waypoint	Mission selectable from close throttle, aerodynamic termination, and/or Deploy parachute
Procerus Kestrel	Shallow bank until restored	Aerodynamic termination
Micropilot MP-2028g	Mission selectable (see next column)	Mission selectable from fly-to, climb, descend, roll, eject chute, etc.

Aircraft	Manufacturer	Contingency-based Recovery	Flight Termination
ScanEagle	Insitu, Inc.	Loiter at point for lost link	Aerodynamic termination if departs mission area
Predator	General Atomics	Return home for lost link	Optional parachute for early models
Global Hawk	Northrop Grumman	Contingency flight paths for various emergency/contingency modes	Terminate with extreme prejudice
Polecat	Lockheed Martin	Unknown	Terminate with extreme prejudice
X-48B	Boeing and Cranfield Aerospace	Unknown	Parachute, airbags, and spin parachute (for stall testing)
Arrow	Jordon Military	Unknown	Parachute and flotation device

Review

- The autopilot is responsible for the estimation of state and control of the aircraft to some degree
- Levels of automation and autonomy are not clearly defined, but some automation necessary as pilot is physically separated from aircraft control
- State estimation is a critical element of flight control
- Flight control software can utilize classical control theory (e.g. PID controllers) or modern control theory (state space controls)

References

- Gundlach, J. (2014). Designing Unmanned Aircraft Systems.. https://doi.org/10.2514/4.102615.
- Jeffrey D. Barton – Fundamentals of Small Unmanned Aircraft Flight
  - Johns Hopkins Apl Technical Digest 31(2):132-149 · January 2012
- NIST Special Publication 1011-II-1.0 Autonomy Levels for Unmanned Systems (ALFUS) Framework – Volume II
- Department of Defense Unmanned Systems Integration Roadmap (2013-2038)
- ICAO Circular 328 “Unmanned Aircraft Systems”
- NATO STANAG 4586 – “Standard interfaces of UAV Control System (UCS) For NATO UAV Interoperability
- Stansbury and Wilson, “Technology Survey and Regulatory Gap Analyses of UAS Sub-Systems toward Access to NAS” Handbook of Unmanned Aerial Vehicles, 2014.

Questions?

EMBRY-RIDDLE
Aeronautical University